LAWSON

Arcticus Systems

Provisioning of Highly Reliable Real-Time Systems

HINC3 Presentation October 18-20, 2010

Harold (Bud) Lawson
and
Kurt-Lennart Lundbäck

Automatic Train Control

Concepts / Paradigms

- Time Driven
- Software Circuits
- Black-Board Memory

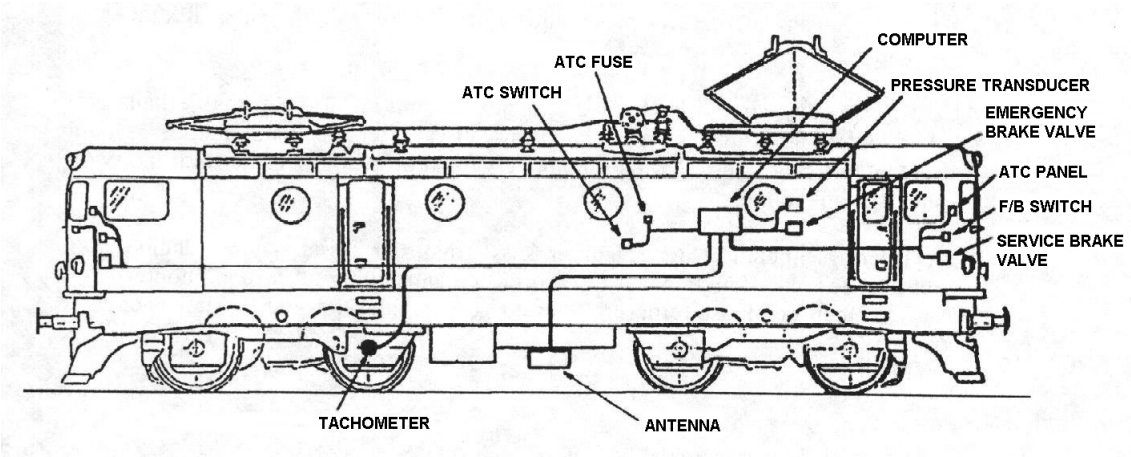

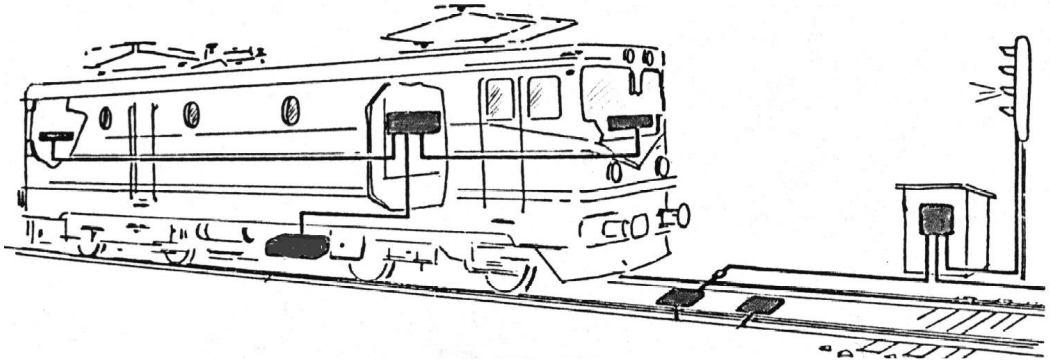

History

- O'Tool RTOS 1986
  - ADA-Rendezvous
  - Dynamic allocation
- VIA Architechture 1992-1995
- The Rubus Concept 1995
  - Focus on dependability
  - Static Allocation
  - Rubus OS
- Rubus Component Models and Tools
  - Rubus CM 1 1997
  - Rubus CM 2 2000
  - Rubus CM 3 2008
  - Rubus CM 4 2010

Automotive System

Vehicle Internal Architecture

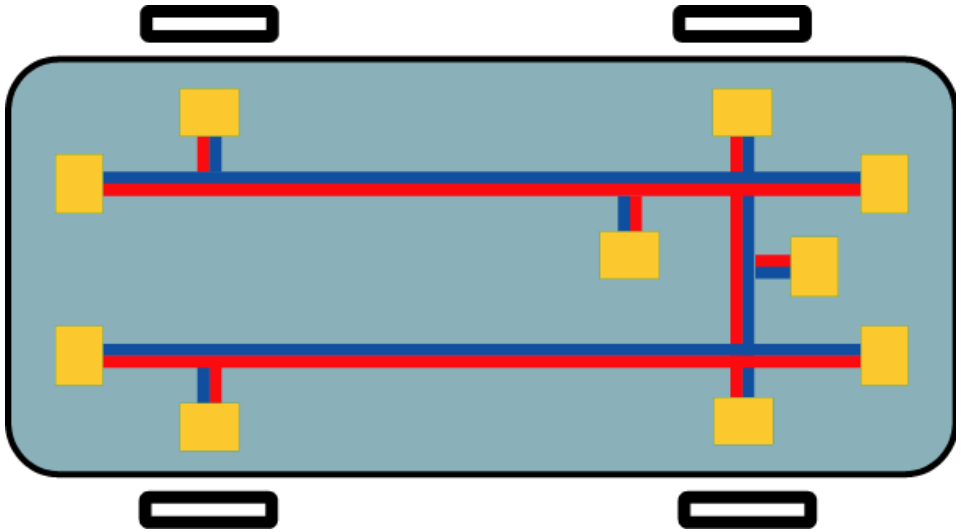

Red = Hard Real-Time Requirements

Blue = Soft Real-Time Requirements

Execution Modelling

The Rubus Component Model

Architecture describing execution environment

Expresses the data- and controlflow

The Rubus Analysis Model

State of the art task model that allows for response-time and shared stack analysis

The Rubus Run-Time Model

RTOS with a low footprint

Supports several execution models

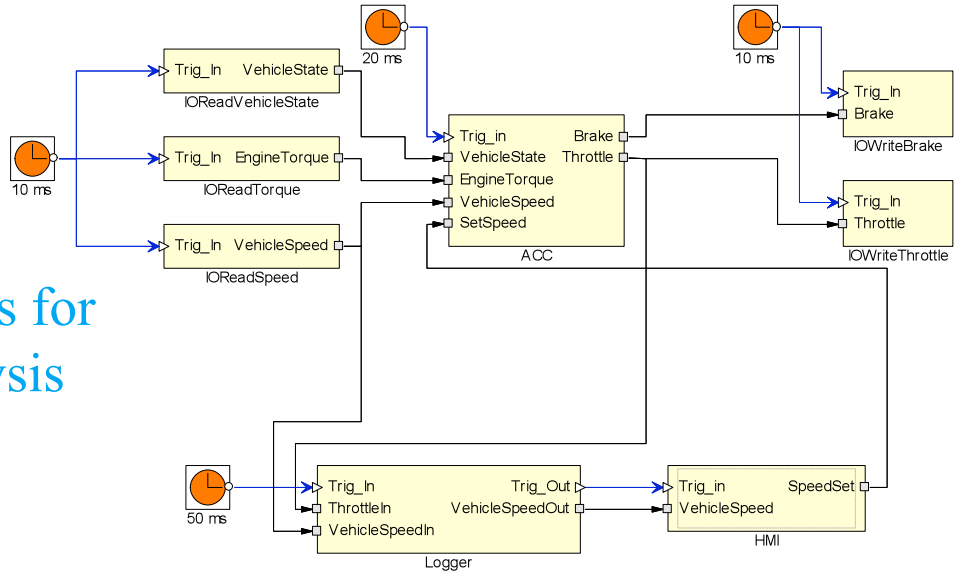

Design Expressed in SW Circuit Diagrams

The Rubus Concept

In industrial use

Mjukvaran är själen i svensk industri

Swedsoft

BAE SYSTEMS

VOLVO

Haldex

HOERBIGER

Rubus® is a registered trademark of Arcticus Systems AB